3'X4'

SURFACE APPLIED

2.35" DOME SPACING

Access Tile
Tactile Systems

www.AccessTile.com 888-679-4022

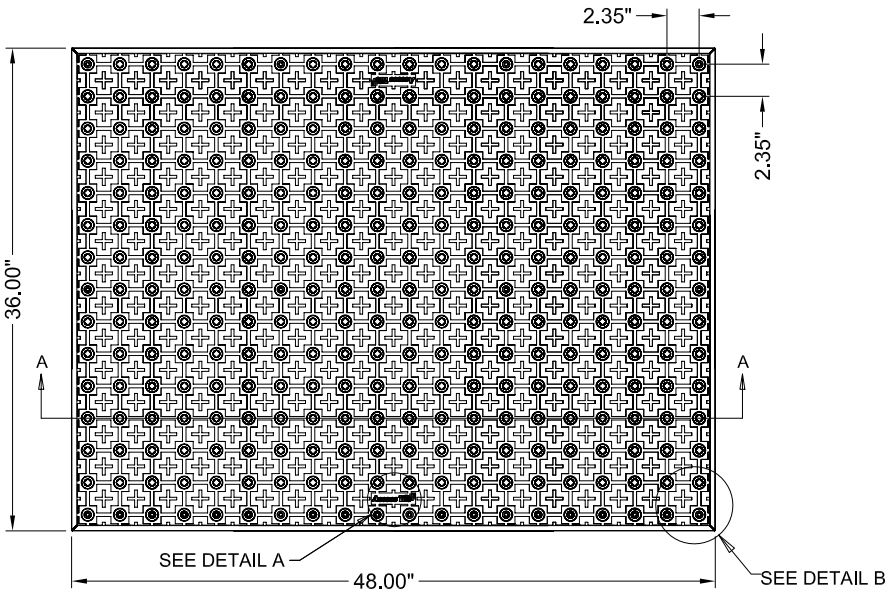

PLAN

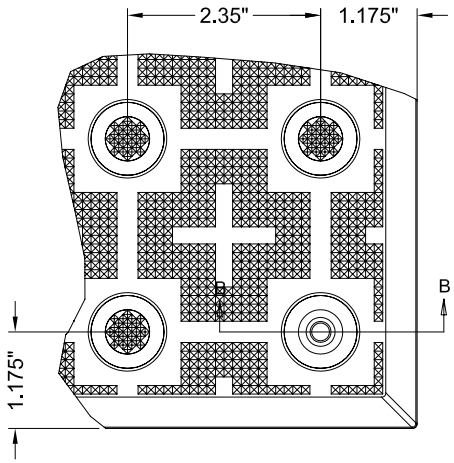

DETAIL B

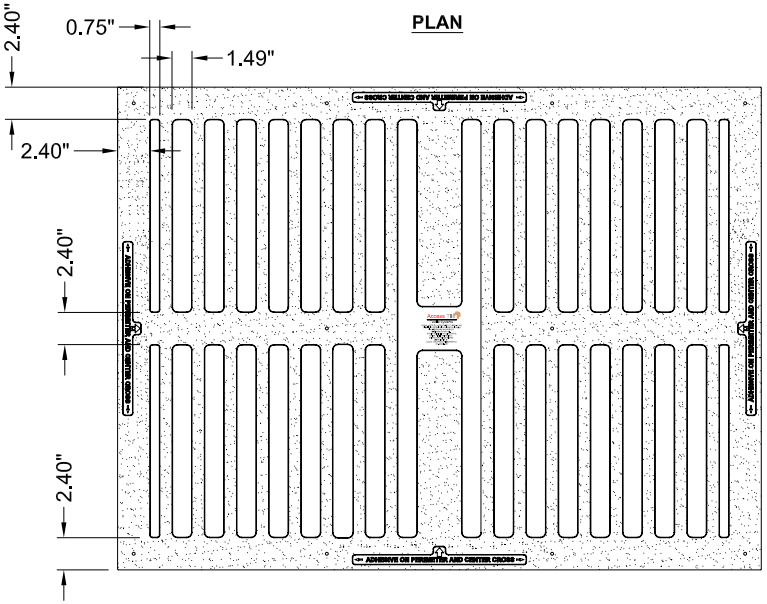

UNDERSIDE VIEW

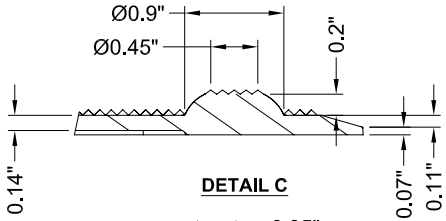

DETAIL C

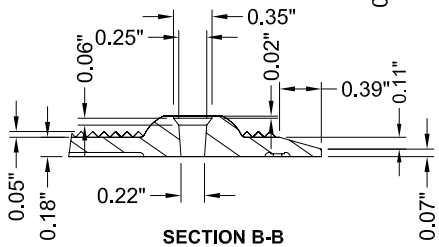

SECTION B-B

SECTION A-A

DETAIL A

www.AccessTile.com

Access Products Inc

© Access Products Inc.
ACCESS, ACCESS TILE, ACCESS AND THE THREE AND TWO DIMENSIONAL DESIGNS ON THE TILE BETWEEN DOMES AND ON DOMES ARE TRADEMARKS OF ENGINEERED SYSTEMS INC.
PATENTS PENDING IN THE UNITED STATES, CANADA AND INTERNATIONALLY
MANUFACTURED AND DISTRIBUTED UNDER LICENSE BY ACCESS WORLD PRODUCTS INCORPORATED
www.accesstile.com
© KENNETH E. SZEKELY

MATERIAL LIST

ITEM	DESCRIPTION	PART NO.	QTY
1	ACCESS TILE	ACC-S-3X4	1
2	TeK™ ANCHOR	ACC-S-ANCH	12
3	TACTILE BOND AND SEAL	TBS-010	1 ea

NOTE: FASTENERS AND 1 TUBE OF TACTILE BOND AND SEAL ARE INCLUDED WITH TILE

REFERENCE DRAWINGS

DWG. NO.	DESCRIPTION

No.	DATE	REVISION	APPR.

SCALE 1"=1'-0" U.N.O. FULL SIZE ONLY 0 3 6 9 12 15

DESIGNED KES	DATE 10/09/2008
DRAWN RWO	10/15/2008
CHECKED KES	
PROJECT MANAGER	
TRADE DETECTABLE WARNING SURFACE	PART NO. ACC-S-3X4
MATERIAL POLYMER COMPOSITE	

SUBJECT

ACCESS TILE®

TRUNCATED DOME, DETECTABLE WARNING TACTILE SURFACE

PROJECT

ACCESS TILE®

TRUNCATED DOME, DETECTABLE WARNING TACTILE SURFACE
3X4 SURFACE APPLIED
INLINE DOME TILE DRAWING.

DRAWING NO.	REV. NO.
ACC-S-3X4	Ø